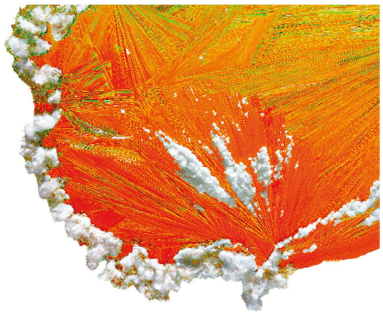

Certificate of Analysis ISO 9001

Reference Material

Product name

trans-Anethole

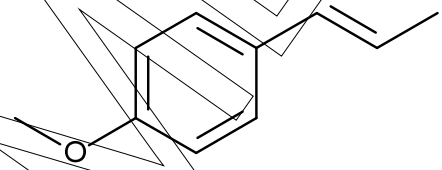

Product code MM0164.01	**Lot number** 1031619
CAS number 4180-23-8	**Appearance** colourless liquid
Molecular weight 148.20	
Molecular formula C10H12O	**Long-term storage** 2 to 8 °C, dark

Assay "as is"
99.1 %

Date of shipment: **30 Sep 2019**

Producer confirms that this reference material (RM) meets the specification detailed on this Certificate of Analysis for **two years** from the date of shipment, provided the substance is stored under the recommended conditions unopened in the original container.

Release by:	**Date of Release:**		
Dr. Sabine Schröder	Luckenwalde, 18 Sep 2019		Product Release

SPECIMEN

Product information

For laboratory use only. Not suitable for human or animal consumption.

Before usage of the RM, it should be allowed to warm to room temperature. No drying required, as the certified value is already corrected for the content of water and other volatile materials.

The product quality is controlled by regularly performed quality control tests (retests).

Further content

Identity

Assay

Final result

Revision table

SPECIMEN

Identity

The identity of the reference material was established by following analyses.

Method	Conditions	Result
^{1}H-NMR	400 MHz, $CDCl_3$	Structure confirmed

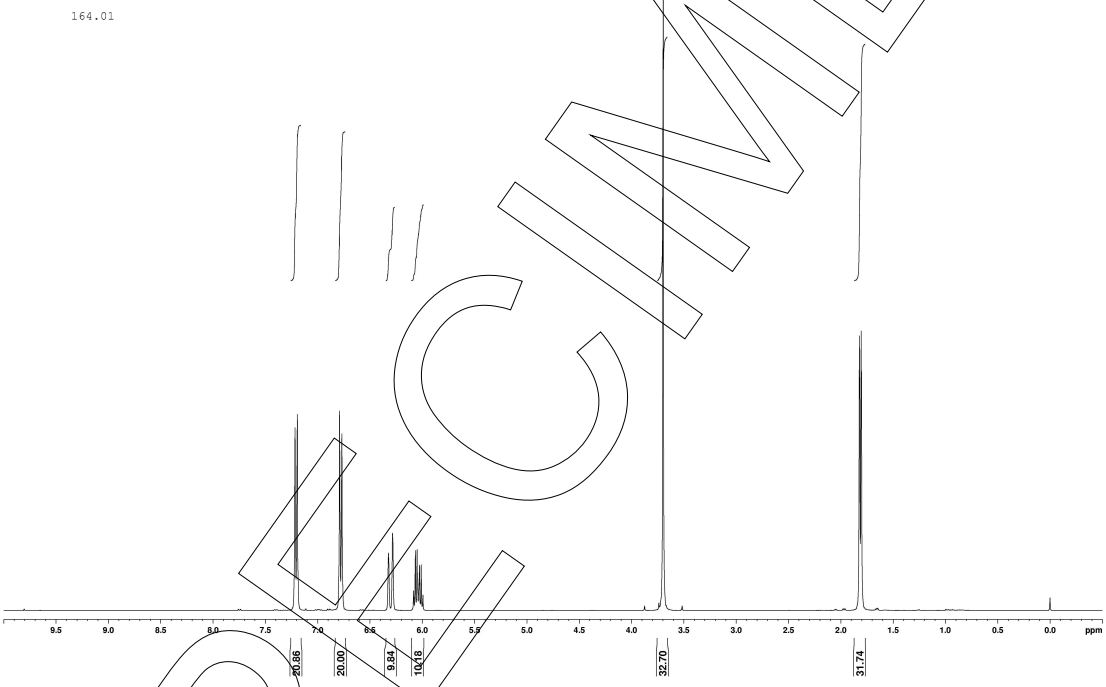

SPECIMEN

Assay

The assay of the reference material was assessed by following analyses.

Purity by High Performance Liquid Chromatography (HPLC)

HPLC conditions:	
Column	LiChrospher 60 RP-select B, 5 µm, 125 x 4 mm
Column temperature	40 °C
Detector	DAD, 255 nm
Injector	Auto 3 µl, 0.0524 mg/ml in Water
Flow rate	1.0 ml/min
Phase A	Water, 0.1 % H_3PO_4
Phase B	Acetonitrile, 0.1 % H_3PO_4
Gradient program	0-20 min A/B 45/55 (v/v)

HPLC chromatogram and peak table

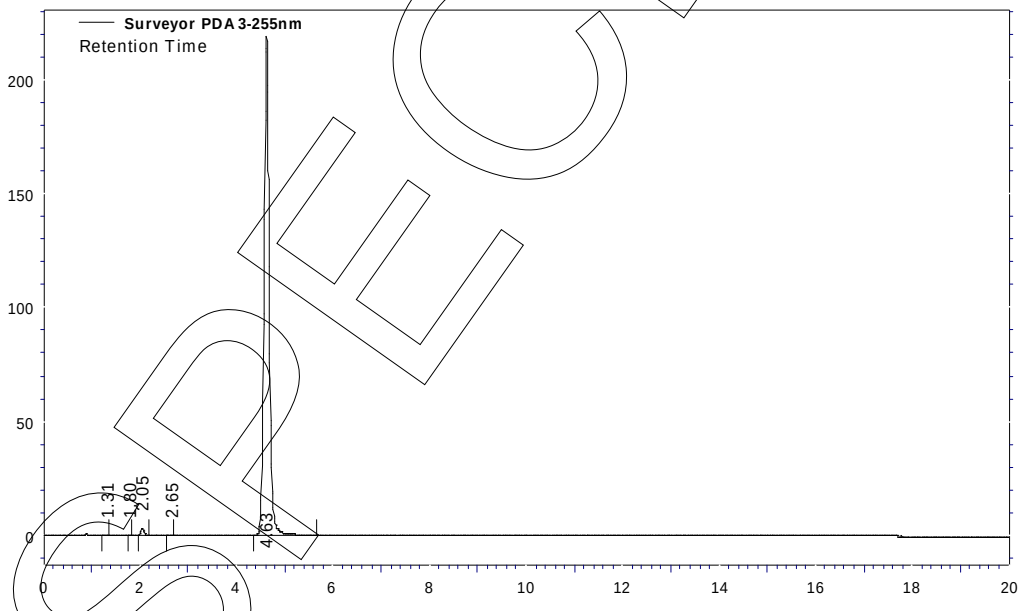

SPECIMEN

Area percent report - sorted by signal			
Pk #	**Retention time**	**Area**	**Area %**
1	1.31	747	0.04
2	1.80	120	0.01
3	2.05	12688	0.75
4	2.65	151	0.01
5	4.63	1674502	99.19
Totals		**1688208**	**100.00**

The content of the analyte was determined as ratio of the peak area of the analyte and the cumulative areas of the purities, added up to 100 %. System peaks were ignored in calculation.

Result (n = 6)	99.19 %; SD = 0.01 %

Volatile content

Water content	
Method	Karl Fischer titration
Result (n = 3)	0.13 %; SD = 0.01 %

SPECIMEN

Final result

Assay "as is": **99.06 %**

The assay "as is" is assessed by 100% method (mass balance) and is equivalent to the assay based on the not anhydrous and not dried substance respectively.

The calculation of the 100% method follows the formula:

$$\text{Assay (\%)} = (100\ \% - \text{volatile contents (\%)}) * \frac{\text{Purity (\%)}}{100\ \%}$$

Volatile contents are considered as absolute contributions and purity is considered as relative contribution. Inorganic residues are excluded by additional tests.

Revision table

Revision	Date	Reason for revision
00	18 Sep 2019	Release of the Certificate of Analysis – initial version

Product warranties for the RM are set out in the terms and conditions of purchase.

SPECIMEN