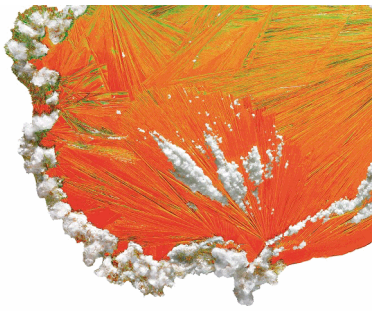

Certificate of Analysis

ISO 9001

Reference Material

Product name

2,2'-(Disulfane-1,2-diyl)bis(N,N-diethylethanamine)
Dihydrochloride

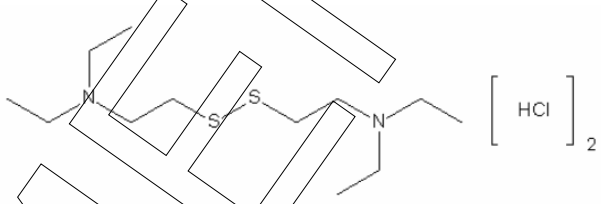

Product code MM0394.06	**Lot number** 1028909
CAS number 22194-38-3	**Appearance** white solid
Molecular weight 337.42	**Melting point** 213 °C (dec)
Molecular formula $C_{12}H_{28}N_2S_2$ 2HCl	**Long-term storage** 2 to 8 °C, dark very hygroscopic

Assay "as is"
96.6 %

Date of shipment: **13 Sep 2019**

Producer confirms that this reference material (RM) meets the specification detailed on this Certificate of Analysis for **one year** from the date of shipment, provided the substance is stored under the recommended conditions unopened in the original container.

Release by:	**Date of Release:**		
Dr. Sabine Schröder	Luckenwalde, 03 Sep 2019		Product Release

SPECIMEN

Product information

For laboratory use only. Not suitable for human or animal consumption.

Before usage of the RM, it should be allowed to warm to room temperature. No drying required, as the certified value is already corrected for the content of water and other volatile materials.

The product quality is controlled by regularly performed quality control tests (retests).

Further content

Identity

Assay

Final result

Revision table

SPECIMEN

Identity

The identity of the reference material was established by following analyses.

Method	Conditions	Result
^{1}H-NMR	400 MHz, DMSO-d_6	Structure confirmed

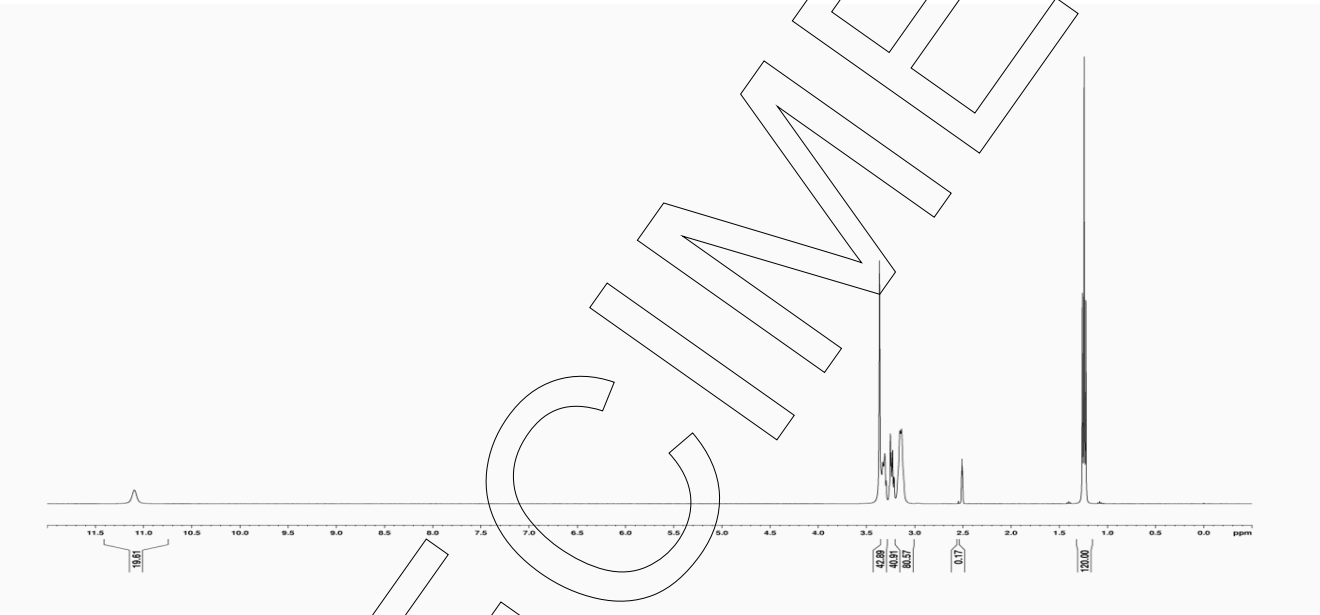

SPECIMEN

Method	Conditions	Result
MS	4.5 kV ESI+; vaporization temperature: 200 °C	Structure confirmed

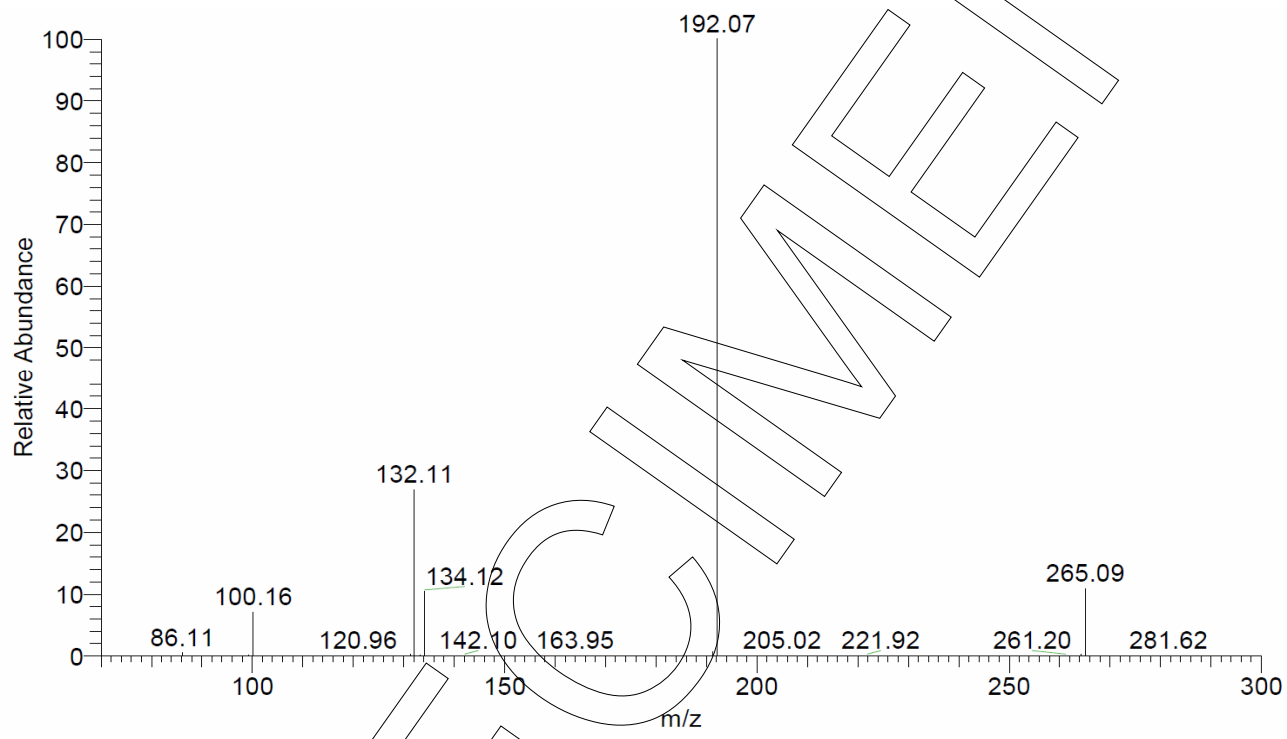

SPECIMEN

Method	Conditions	Result
IR	Attenuated Total Reflection Fourier Transform Infrared (ATR-FTIR) Spectroscopy	Structure confirmed

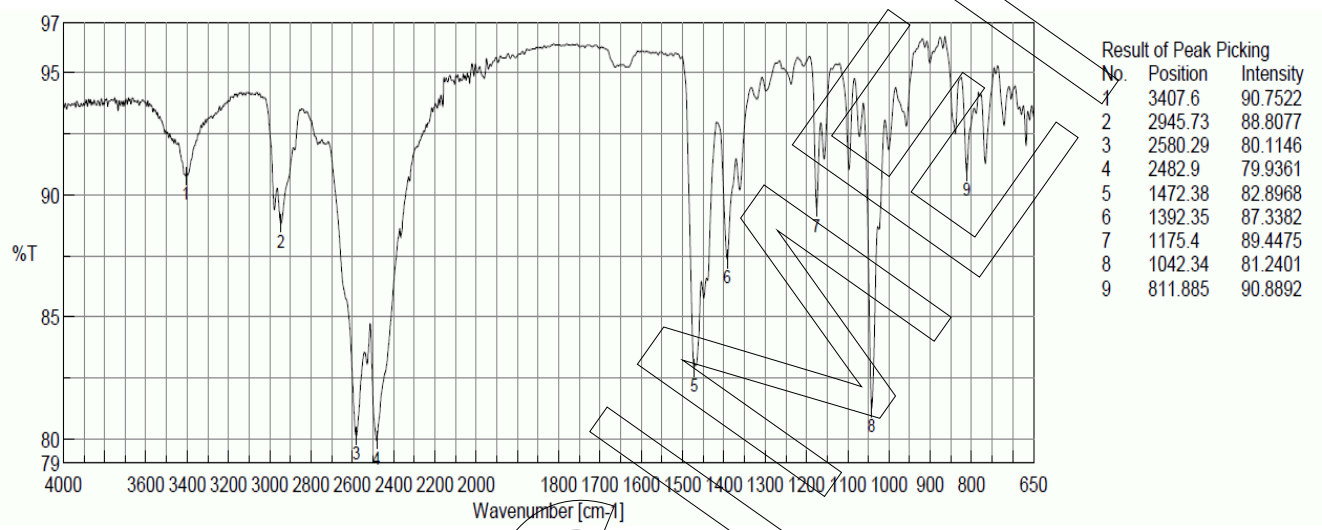

Volatile content

Water content	
Method	Karl Fischer titration
Result (n = 3)	3.79 %; SD = 0.15 %

Residual solvents	
Method	^{1}H-NMR
Result (n = 1)	Sum: 0.07 % 0.07 % Dimethyl sulfoxide

SPECIMEN

Final result

Assay "as is": **96.56 %**

The assay "as is" is assessed by quantitative NMR spectroscopy and is equivalent to the assay based on the not anhydrous and not dried substance respectively.

Method: Value assigning technique - quantitative NMR spectroscopy	
Conditions	400 MHz, DMSO-d_6
Internal standard	1,3,5-Trimethoxybenzene (certified reference material), signal 5.7 - 6.5 ppm, 3 H
Result (mass fraction, **n = 3**)	96.56 %; SD = 0.09 %

Quantitative NMR spectrum

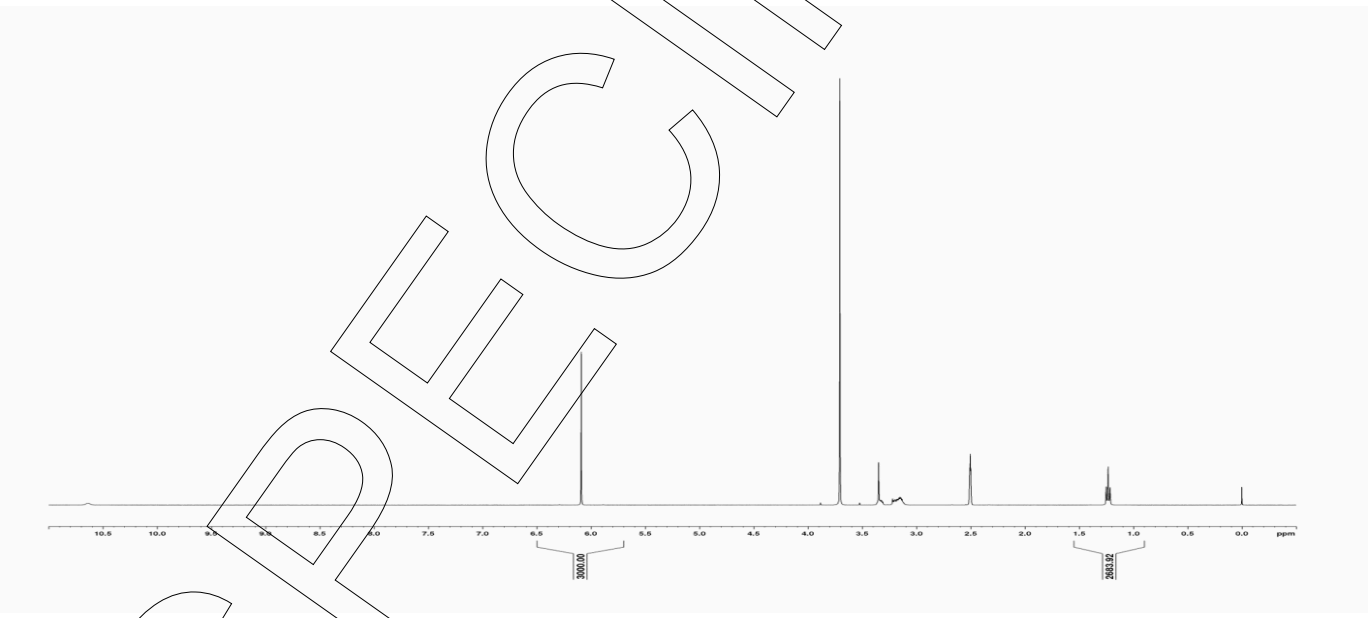

SPECIMEN

Revision table

Revision	Date	Reason for revision
00	03 Sep 2019	Release of the Certificate of Analysis - initial version

Product warranties for the RM are set out in the terms and conditions of purchase.

SPECIMEN